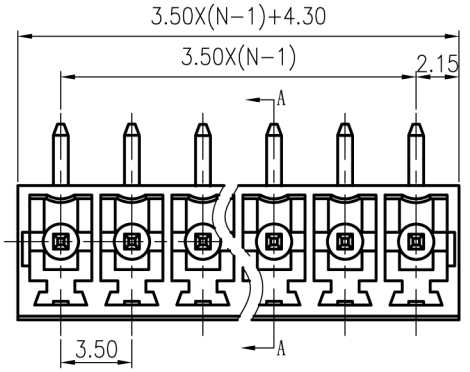

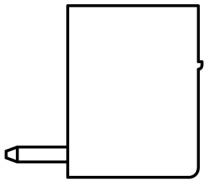

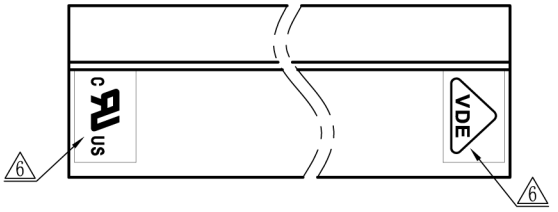

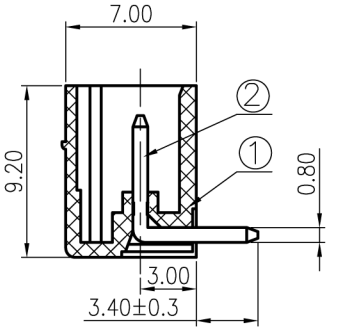

SECTION A-A

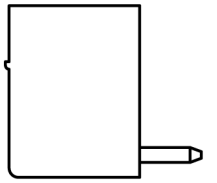

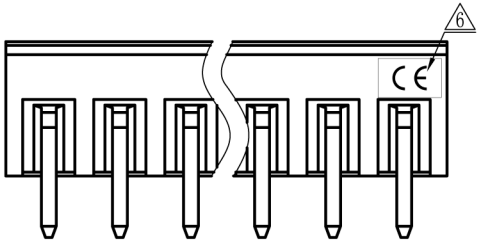

Notes:

1. Pitch: 3.5mm, poles:2-24p
2. Rated voltage/current: UL 300V/8A
   VDE 250/7A
3. Operation temperratures:-40° C～+105° C
4. Withstanding voltage: AC2000V/1Min
5. Insulation resistance:5000MΩ/DC1000V
6. Undimensioned Tolerances:

Pitch range in mm			Naminal dimension range in mm					—
to 6	over 6 to 10	over 10 to 24	to 30	over 30 to 60	over 60 to 100	over 100 to 150	over 150	⌒ ▱
±0.10	±0.15	±0.25	±0.2	±0.3	±0.5	±0.7	±1.0	0.05/10

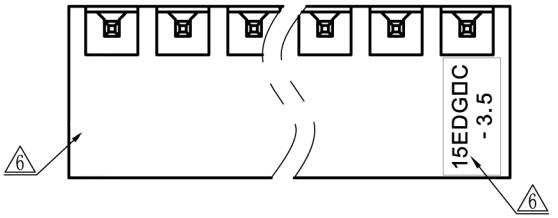

ITEM	NAME OF PART	NO. OF PART	Q"TY	MATERIAL	NOTES
1	15EDGRC-3.5-Housing	1002A0YXXA(H)	1	PA66	UL94V-0

DETACHED LISTS

2	15EDGRC-Pin header	⚠5 1003B00040(H)	XX	Brass	Automatic assembly
2	15EDGRC-Pin header	1003B00010(H)	XX	Brass	Manual assembly

MM (INCH)
TOLERANCES EXCEPT AS NOTED
MM
.0 ±
.00 ±
.000 ±
ANGLES ± 1°
THIRD ANGLE PROJECTION

DFTO DZJ DATE 07/27/05"
CHKD DATE
MFO DATE
APPVL DATE
MATERIAL :
G.E :
FINISH :
SCALE : 1:1

NAME
15EDGRC-3.5-XXP-1Y-00A(H)
DRAWING NO. 15EDGRC-3.5-E02
/PART NO.
SIZE A3
REV T6 04/11/09"
DO NOT SCALE DRAWING
SHEET 1 OF 1